HI-15730, HI-15740

MIL-STD-1553
3.3V Monolithic Dual Transceivers

February 2023

DESCRIPTION

The HI-15730 and HI-15740 are low power CMOS dual transceivers designed to meet the requirements of the MIL-STD-1553 specification. They are form, fit and function drop-in replacement for Holt's HI-1573 and HI-1574 family of MIL-STD-1553 transceivers.

The transmitter section of each bus takes complementary CMOS / TTL Manchester II bi-phase data and converts it to differential voltages suitable for driving the bus isolation transformer. Separate transmitter inhibit control signals are provided for each transmitter.

The receiver section of each bus converts the 1553 bus bi-phase differential data to complementary CMOS / TTL data suitable for input to a Manchester decoder. Each receiver has a separate enable input, which forces the receiver outputs to logic "0" (HI-15730) or logic "1" (HI-15740).

To minimize the package size for this function, the transmitter outputs are internally connected to the receiver inputs, so that only two pins are required for connection to each coupling transformer. For designs requiring independent access to transmitter and receiver 1553 signals, please contact your Holt Sales representative.

FEATURES

- Compliant to MIL-STD-1553A and B, ARINC 708A
- 3.3V single supply operation
- Smallest footprint available in 7 mm x 7 mm 44- pin plastic chip-scale package (QFN)
- Available in DIP and small outline (ESOIC) package options
- Industrial and extended temperature ranges
- Industry standard pin configurations

PIN CONFIGURATIONS

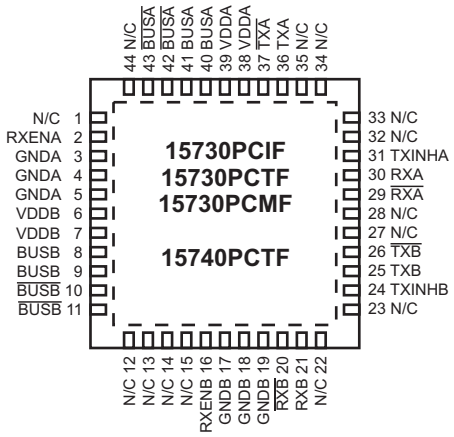

44 Pin Plastic 7mm x 7mm Chip-scale package (QFN)

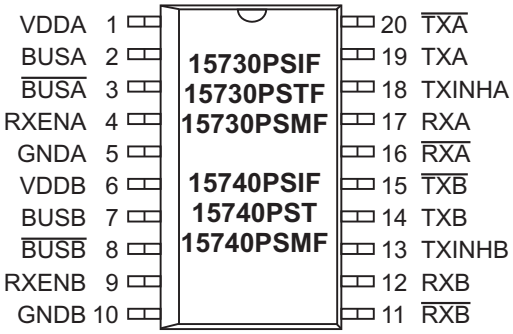

20 Pin Plastic ESOIC - WB package

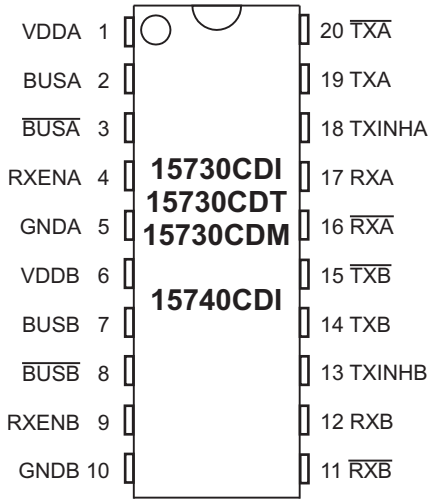

20 Pin Ceramic DIP package

CROSS REFERENCE AND ORDERING INFORMATION

Holt New P/N	Holt Old P/N	Bus-Idle State	Package	Lead Finish	Temp. Range
HI-15730CDI	HI-1573CDI	0	20 Pin Ceramic Side-Brazed DIP, (20C)	Gold (Pb-free, RoHS compliant)	-40°C TO +85°C
HI-15730CDM	HI-1573CDM	0	20 Pin Ceramic Side-Brazed DIP, (20C)	Tin / Lead (Sn / Pb) Solder	-55°C TO +125°C
HI-15730CDT	HI-1573CDT	0	20 Pin Ceramic Side-Brazed DIP, (20C)	Gold (Pb-free, RoHS compliant)	-55°C TO +125°C
HI-15730PCIF	HI-1573PCIF	0	44 Pin Plastic 7mm x 7mm QFN, (44PCS)	NiPdAu (Pb-free, RoHS compliant)	-40°C TO +85°C
HI-15730PCMF	HI-1573PCMF	0	44 Pin Plastic 7mm x 7mm QFN, (44PCS)	NiPdAu (Pb-free, RoHS compliant)	-55°C TO +125°C
HI-15730PCTF	HI-1573PCTF	0	44 Pin Plastic 7mm x 7mm QFN, (44PCS)	NiPdAu (Pb-free, RoHS compliant)	-55°C TO +125°C
HI-15730PSI	HI-1573PSI	0	20 Pin Plastic ESOIC - WB, Thermally Enhanced (20HWE)	Tin / Lead (Sn / Pb) Solder	-40°C TO +85°C
HI-15730PSIF	HI-1573PSIF	0	20 Pin Plastic ESOIC - WB, Thermally Enhanced (20HWE)	100% Matte Tin (Pb-free, RoHS compliant)	-40°C TO +85°C
HI-15730PSM	HI-1573PSM	0	20 Pin Plastic ESOIC - WB, Thermally Enhanced (20HWE)	Tin / Lead (Sn / Pb) Solder	-55°C TO +125°C
HI-15730PSMF	HI-1573PSMF	0	20 Pin Plastic ESOIC - WB, Thermally Enhanced (20HWE)	100% Matte Tin (Pb-free, RoHS compliant)	-55°C TO +125°C
HI-15730PST	HI-1573PST	0	20 Pin Plastic ESOIC - WB, Thermally Enhanced (20HWE)	Tin / Lead (Sn / Pb) Solder	-55°C TO +125°C
HI-15730PSTF	HI-1573PSTF	0	20 Pin Plastic ESOIC - WB, Thermally Enhanced (20HWE)	100% Matte Tin (Pb-free, RoHS compliant)	-55°C TO +125°C
HI-15740CDI	HI-1574CDI	1	20 Pin Ceramic Side-Brazed DIP, (20C)	Gold (Pb-free, RoHS compliant)	-40°C TO +85°C
HI-15740PCTF	HI-1574PCTF	1	44 Pin Plastic 7mm x 7mm QFN, (44PCS)	NiPdAu (Pb-free, RoHS compliant)	-55°C TO +125°C
HI-15740PSI	HI-1574PSI	1	20 Pin Plastic ESOIC - WB, Thermally Enhanced (20HWE)	Tin / Lead (Sn / Pb) Solder	-40°C TO +85°C
HI-15740PSIF	HI-1574PSIF	1	20 Pin Plastic ESOIC - WB, Thermally Enhanced (20HWE)	100% Matte Tin (Pb-free, RoHS compliant)	-40°C TO +85°C
HI-15740PSM	HI-1574PSM	1	20 Pin Plastic ESOIC - WB, Thermally Enhanced (20HWE)	Tin / Lead (Sn / Pb) Solder	-55°C TO +125°C
HI-15740PSMF	HI-1574PSMF	1	20 Pin Plastic ESOIC - WB, Thermally Enhanced (20HWE)	100% Matte Tin (Pb-free, RoHS compliant)	-55°C TO +125°C
HI-15740PST	HI-1574PST	1	20 Pin Plastic ESOIC - WB, Thermally Enhanced (20HWE)	Tin / Lead (Sn / Pb) Solder	-55°C TO +125°C

PIN DESCRIPTIONS

PIN (DIP & SOIC)	SYMBOL	FUNCTION	DESCRIPTION
1	VDDA	power supply	+3.3 volt power for transceiver A
2	BUSA	analog	MIL-STD-1533 bus driver A, positive signal
3	$\overline{\text{BUSA}}$	analog	MIL-STD-1553 bus driver A, negative signal
4	RXENA	digital input	Receiver A enable. If low, forces RXA and $\overline{\text{RXA}}$ low (HI-15730) or high (HI-15740)
5	GNDA	power supply	Ground for transceiver A
6	VDDB	power supply	+3.3 volt power for transceiver B
7	BUSB	analog	MIL-STD-1533 bus driver B, positive signal
8	$\overline{\text{BUSB}}$	analog	MIL-STD-1553 bus driver B, negative signal
9	RXENB	digital input	Receiver B enable. If low, forces RXB and $\overline{\text{RXB}}$ low (HI-15730) or high (HI-15740)
10	GNDB	power supply	Ground for transceiver B
11	$\overline{\text{RXB}}$	digital output	Receiver B output, inverted
12	RXB	digital output	Receiver B output, non-inverted
13	TXINHB	digital input	Transmit inhibit, bus B. If high BUSB, $\overline{\text{BUSB}}$ disabled
14	TXB	digital input	Transmitter B digital data input, non-inverted
15	$\overline{\text{TXB}}$	digital input	Transmitter B digital data input, inverted
16	$\overline{\text{RXA}}$	digital output	Receiver A output, inverted
17	RXA	digital output	Receiver A output, non-inverted
18	TXINHA	digital input	Transmit inhibit, bus A. If high BUSA, $\overline{\text{BUSA}}$ disabled
19	TXA	digital input	Transmitter A digital data input, non-inverted
20	$\overline{\text{TXA}}$	digital input	Transmitter A digital data input, inverted

FUNCTIONAL DESCRIPTION

The HI-15730 family of data bus transceivers contains differential voltage source drivers and differential receivers. They are intended for applications using a MIL-STD-1553A/B data bus. The device produces a trapezoidal output waveform during transmission.

TRANSMITTER

Data input to the device's transmitter section is from the complementary CMOS inputs TXA/B and $\overline{\text{TXA}}$/$\overline{\text{B}}$. The transmitter accepts Manchester II bi-phase data and converts it to differential voltages on BUSA/B and $\overline{\text{BUSA}}$/$\overline{\text{B}}$. The transceiver outputs are either direct- or transformer-coupled to the MIL-STD-1553 data bus. Both coupling methods produce a nominal voltage on the bus of 7.5 volts peak to peak.

The transmitter is automatically inhibited and placed in the high impedance state when both TXA/B and $\overline{\text{TXA}}$/$\overline{\text{B}}$ are driven with the same logic state. A logic "1" applied to the TXINHA/B input will force the transmitter to the high impedance state, regardless of the state of TXA/B and $\overline{\text{TXA}}$/$\overline{\text{B}}$.

RECEIVER

The receiver accepts bi-phase differential data from the MIL-STD-1553 bus through the same direct- or transformer-coupled interface as the transmitter. The receiver's differential input stage drives a filter and threshold comparator that produces CMOS data at the RXA/B and $\overline{\text{RXA}}$/$\overline{\text{B}}$ output pins. When the MIL-STD-1553 bus is idle and RXENA or RXENB are high, RXA/B will be logic "0" on HI-15730 and logic "1" on HI-15740.

The receiver outputs are forced to the bus idle state (logic "0" on HI-15730 or logic "1" on HI-15740) when RXENA or RXENB is low.

MIL-STD-1553 BUS INTERFACE

A direct-coupled interface (see Figure 2) uses a 1:2.5 ratio isolation transformer and two 55 ohm isolation resistors between the transformer and the bus. The primary center-tap of the isolation transformer must be connected to GND.

In a transformer-coupled interface (see Figure 2), the transceiver is connected to a 1:1.79 isolation transformer which in turn is connected to a 1:1.4 coupling transformer. The transformer-coupled method also requires two coupling resistors equal to 75% of the bus characteristic impedence (Zo) between the coupling transformer and the bus.

Figure 3 and Figure 4 show test circuits for measuring electrical characteristics of both direct- and transformer-coupled interfaces respectively. (See electrical characteristics on the following pages).

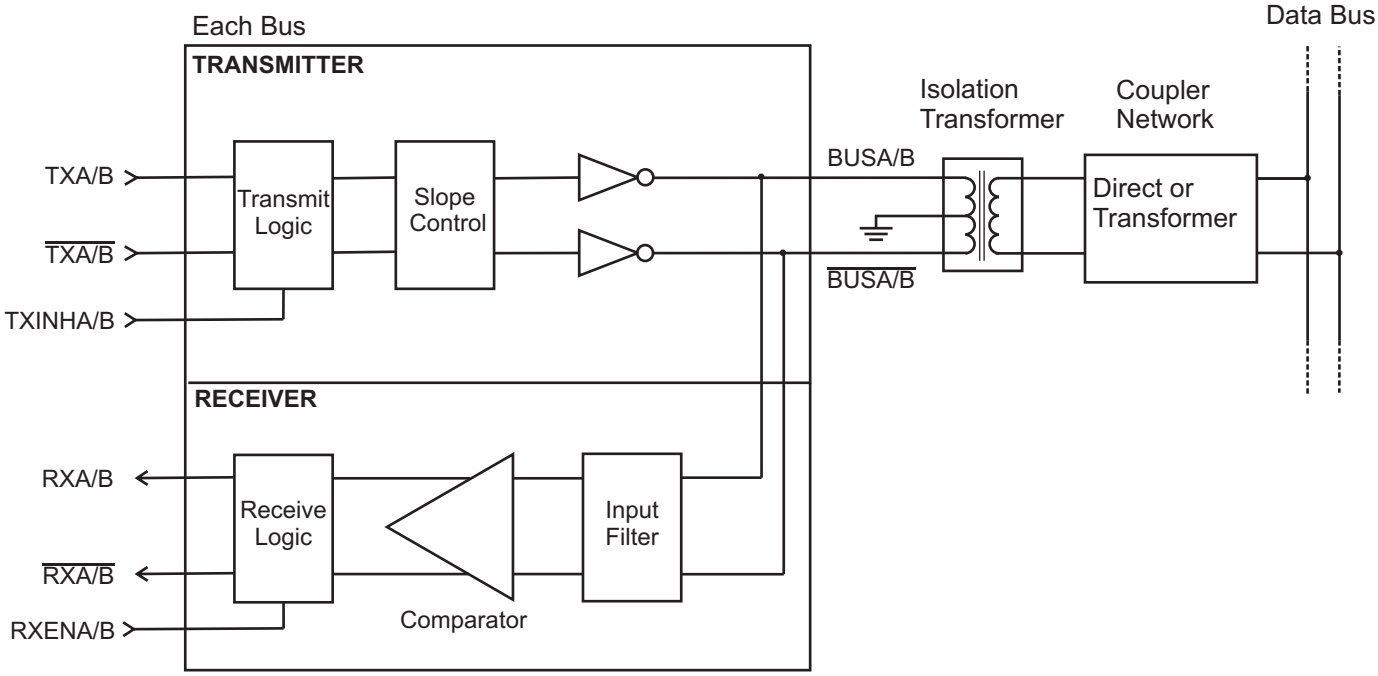

Figure 1. Block Diagram

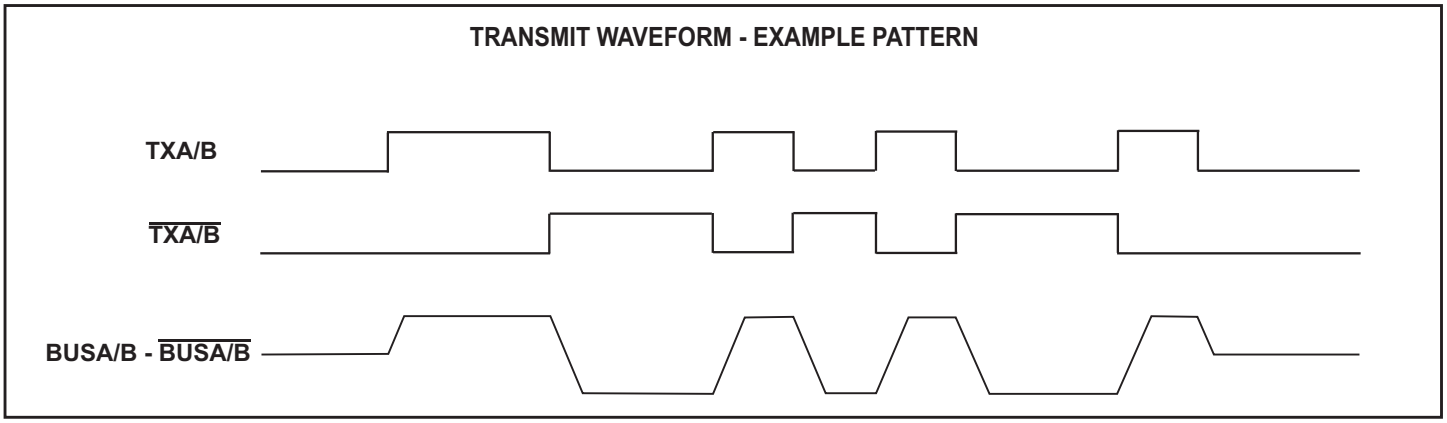

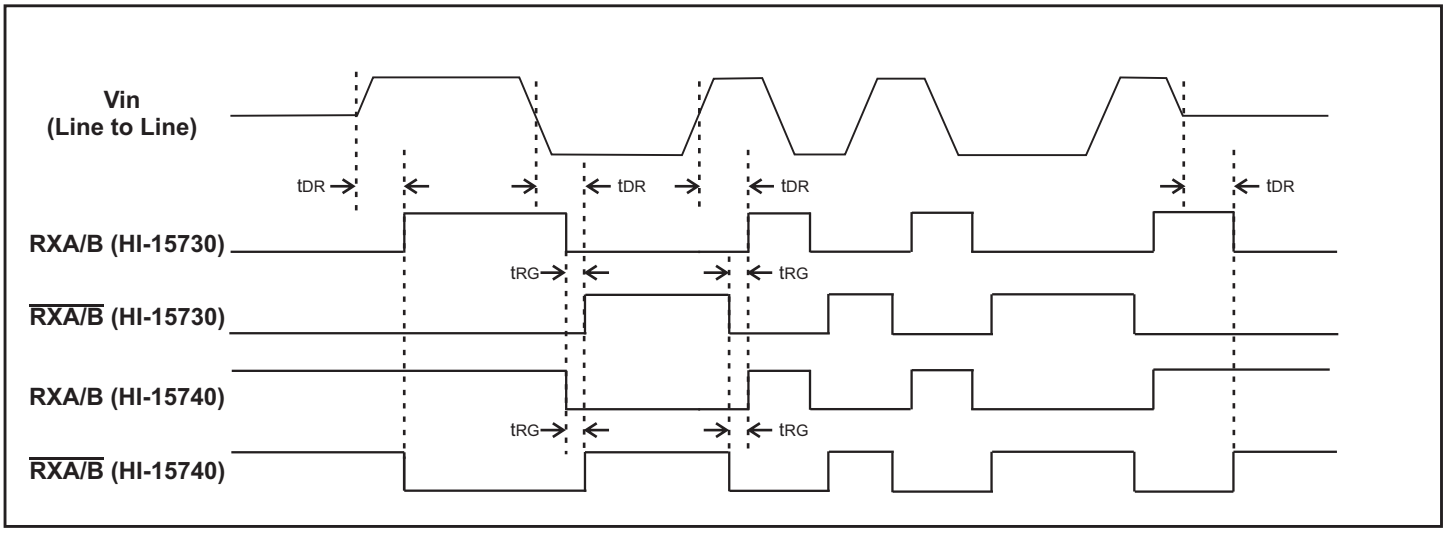

ABSOLUTE MAXIMUM RATINGS

Supply voltage (VDD)	-0.3 V to +5 V
Logic input voltage range	-0.3 V dc to +3.6 V
Receiver differential voltage	50 Vp-p
Driver peak output current	+1.0 A
Solder Reflow Temperature	260°C
Junction Temperature	175°C
Storage Temperature	-65°C to +150°C

RECOMMENDED OPERATING CONDITIONS

Supply Voltage

VDD..... 3.3V... ±5%

Temperature Range

Industrial .....-40°C to +85°C
Extended.....-55°C to +125°C

NOTE: Stresses above absolute maximum ratings or outside recommended operating conditions may cause permanent damage to the device. These are stress ratings only. Operation at the limits is not recommended.

DC ELECTRICAL CHARACTERISTICS

VDD = 3.15 V to 3.45V, GND = 0V, T_A = Operating Temperature Range (unless otherwise specified).

PARAMETER	SYMBOL	CONDITION	MIN	TYP	MAX	UNITS
Operating Voltage	VDD		3.15	3.30	3.45	V
Total Supply Current	ICC1	Not Transmitting		10	17	mA
	ICC2	Transmit one bus @ 50% duty cycle		265	300	mA
	ICC3	Transmit one bus @ 100% duty cycle		530	600	mA
Power Dissipation	PD1	Not Transmitting		0.033	0.060	W
	PD2	Transmit one bus @ 100% duty cycle		0.70	0.86	W
Min. Input Voltage (HI)	V_{IH}	Digital inputs	70%			VDD
Max. Input Voltage (LO)	V_{IL}	Digital inputs			30%	VDD
Min. Input Current (HI)	I_{IH}	Digital inputs (pull-downs), V_{IH} = 3.3V	5	30	110	µA
Max. Input Current (LO)	I_{IL}	Digital inputs (pull-ups), V_{IL} = 0V	-110	-30	-5	µA
Min. Output Voltage (HI)	V_{OH}	I_{OUT} = -1.0mA, Digital outputs	90%			VDD
Max. Output Voltage (LO)	V_{OL}	I_{OUT} = 1.0mA, Digital outputs			10%	VDD
RECEIVER (Measured at Point "A_D" in Figure 3 unless otherwise specified)						
Input resistance	R_{IN}	Differential (at chip pins)	20			Kohm
Input capacitance	C_{IN}	Differential			5	pF
Common mode rejection ratio	CMRR		40			dB
Input Level	V_{IN}	Differential			9	Vp-p
Input common mode voltage	V_{ICM}		-5.0		5.0	V-pk
Threshold Voltage - Direct-coupled Detect	V_{THD}	1 Mhz Sine Wave Measured at Point "A_D" in Figure 3 RXA/B, $\overline{RXA/B}$ pulse width >70 ns	1.15			Vp-p
No Detect	V_{THND}	No pulse at RXA/B, $\overline{RXA/B}$			0.28	Vp-p
Theshold Voltage - Transformer-coupled Detect	V_{THD}	1 MHz Sine Wave Measured at Point "A_T" in Figure 4 RXA/B, $\overline{RXA/B}$ pulse width >70 ns	0.86			Vp-p
No Detect	V_{THND}	No pulse at RXA/B, $\overline{RXA/B}$			0.20	Vp-p

DC ELECTRICAL CHARACTERISTICS (cont.)

VDD = 3.15 V to 3.45V, GND = 0V, T_A = Operating Temperature Range (unless otherwise specified).

PARAMETER		SYMBOL	CONDITION	MIN	TYP	MAX	UNITS
TRANSMITTER (Measured at Point "A_D" in Figure 3 unless otherwise specified)							
Output Voltage	Direct coupled	V_{OUT}	35 ohm load (Measured at Point "A_D" in Figure 3)	6.0		9.0	Vp-p
	Transformer coupled	V_{OUT}	70 ohm load (Measured at Point "A_T" in Figure 4)	18.0		27.0	Vp-p
Output Noise		V_{ON}	Differential, inhibited			10.0	mVp-p
Output Dynamic Offset Voltage	Direct coupled	V_{DYN}	35 ohm load (Measured at Point "A_D" in Figure 3)	-90		90	mV
	Transformer coupled	V_{DYN}	70 ohm load (Measured at Point "A_T" in Figure 4)	-250		250	mV
Output resistance		R_{OUT}	Differential, not transmitting	10			Kohm
Output Capacitance		C_{OUT}	1 MHz sine wave			15	pF

AC ELECTRICAL CHARACTERISTICS

VDD = 3.15 V to 3.45V, GND = 0V, T_A =Operating Temperature Range (unless otherwise specified).

PARAMETER	SYMBOL	TEST CONDITIONS	MIN	TYP	MAX	UNITS
RECEIVER (Measured at Point "A_T" in Figure 4)						
Receiver Delay	t_{DR}	From input zero crossing to RXA/B or $\overline{RXA/B}$			500 Note 3	ns
Receiver gap time	t_{RG}	Spacing between RXA/B and $\overline{RXA/B}$ pulses	60 Note 1		430 Note 2	ns
Receiver Enable Delay	t_{REN}	From RXENA/B rising or falling edge to RXA/B or $\overline{RXA/B}$			40	ns
TRANSMITTER (Measured at Point "A_D" in Figure 3)						
Driver Delay	t_{DT}	TXA/B, $\overline{TXA/B}$ to BUSA/B, $\overline{BUSA/B}$			150	ns
Rise time	tr	35 ohm load	100		300	ns
Fall Time	tf	35 ohm load	100		300	ns
Inhibit Delay	t_{DI-H}	Inhibited output			100	ns
	t_{DI-L}	Active output			150	ns

Note 1. Measured using a 1 MHz sinusoid, 20 V peak to peak, line to line at point "AT" (Guaranteed but not tested).

Note 2. Measured using a 1 MHz sinusoid, 860 mV peak to peak, line to line at point "AT" (100% tested).

Note 3. Measured using a 1 MHz sinusoid, 860 mV peak to peak, line to line at point "AT". Measured from input zero crossing point.

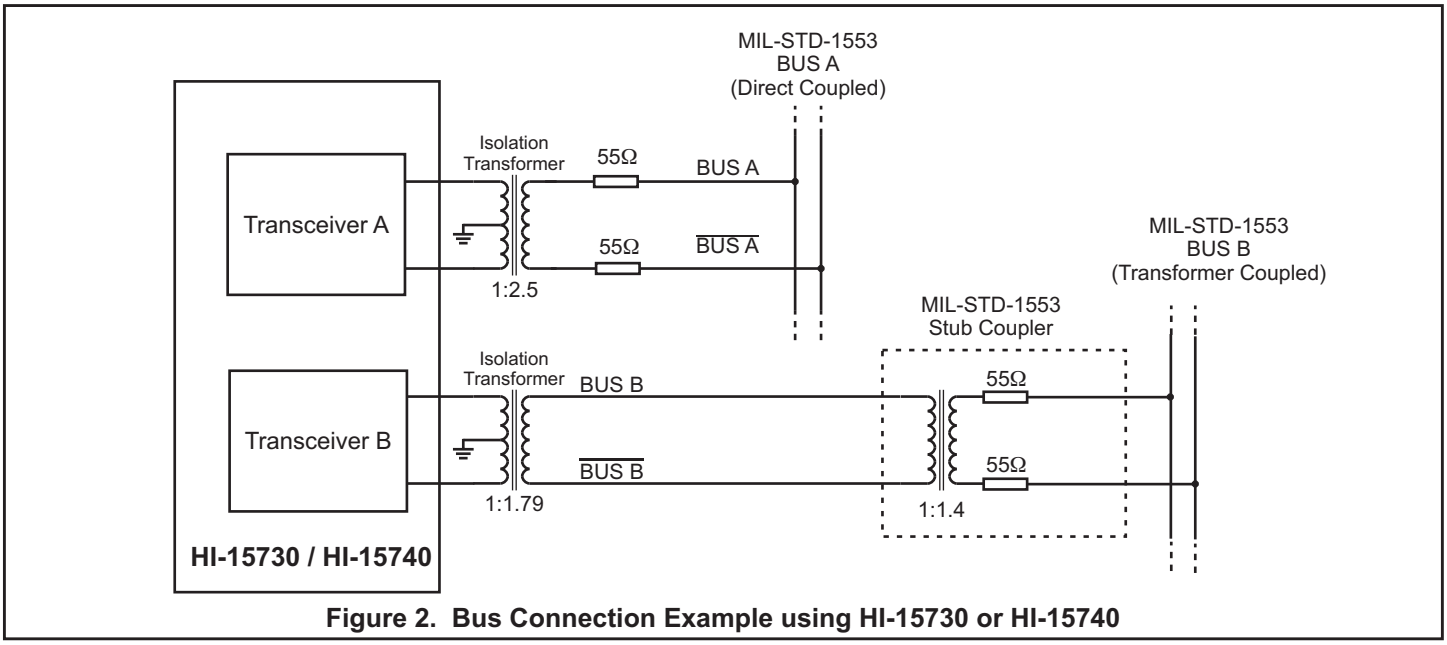

Figure 2. Bus Connection Example using HI-15730 or HI-15740

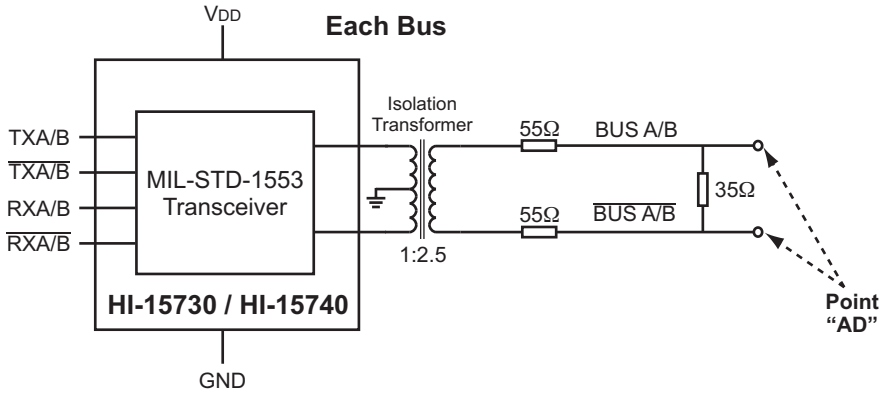

Figure 3. Direct Coupled Test Circuit

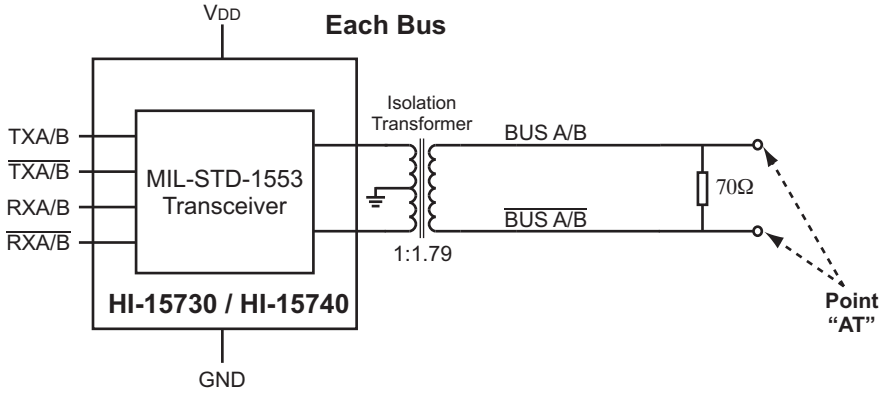

Figure 4. Transformer Coupled Test Circuit

HEAT SINK - ESOIC & CHIP-SCALE PACKAGE

Both the HI-15730PSI/T/M and HI-15740PSI/T/M use a 20-pin thermally enhanced SOIC package. The HI-15730PCI/T/M and HI-15740PCI/T/M use a plastic chip-scale package (QFN). These packages include a metal heat sink located on the bottom surface of the device. This heat sink should be soldered down to the printed circuit board for optimum thermal dissipation.

The heat sink is electrically isolated and may be soldered to any convenient power or ground plane.

APPLICATIONS NOTE

Holt Applications Note AN-500 provides circuit design notes regarding the use of Holt's family of MIL-STD-1553 transceivers. Layout considerations, as well as recommended interface and protection components are included.

RECOMMENDED TRANSFORMERS

The HI-15730 and HI-15740 transceivers have been characterized for compliance with the electrical requirements of MIL-STD-1553 when used with the following transformers. Holt recommends the Premier Magnetics parts as offering the best combination of electrical performance, low cost and small footprint.

MANUFACTURER	PART NUMBER	APPLICATION	TURNS RATIO(S)	DIMENSIONS
Premier Magnetics	PM-DB2725EX	Isolation	Dual ratio 1:1.79, 1:2.5	0.4 x 0.4 x 0.242 inches
Premier Magnetics	PM-DB2702	Stub coupling	1:1.4	.625 x .625 x .250 inches
Premier Magnetics	PM-DB2791S	Isolation	1:2.5	0.4 x 0.4 x 0.185 inches
Premier Magnetics	PM-DB2795S	Isolation	1:1.79	0.4 x 0.4 x 0.185 inches
Premier Magnetics	PM-DB2798S	Isolation	Dual ratio 1:1.79, 1:2.5	0.4 x 0.4 x 0.185 inches
Premier Magnetics	PM-DB2762	Isolation	Dual core 1:2.5	0.4 x 0.4 x 0.320 inches
Premier Magnetics	PM-DB2766	Isolation	Dual core 1:1.79	0.4 x 0.4 x 0.320 inches

REVISION HISTORY

Document	Rev.	Date	Description of Change
DS15730	New	02/06/2023	Initial Release.

20-PIN PLASTIC SMALL OUTLINE (ESOIC) - WB
(Wide Body, Thermally Enhanced)

millimeters (inches)

Package Type: 20HWE

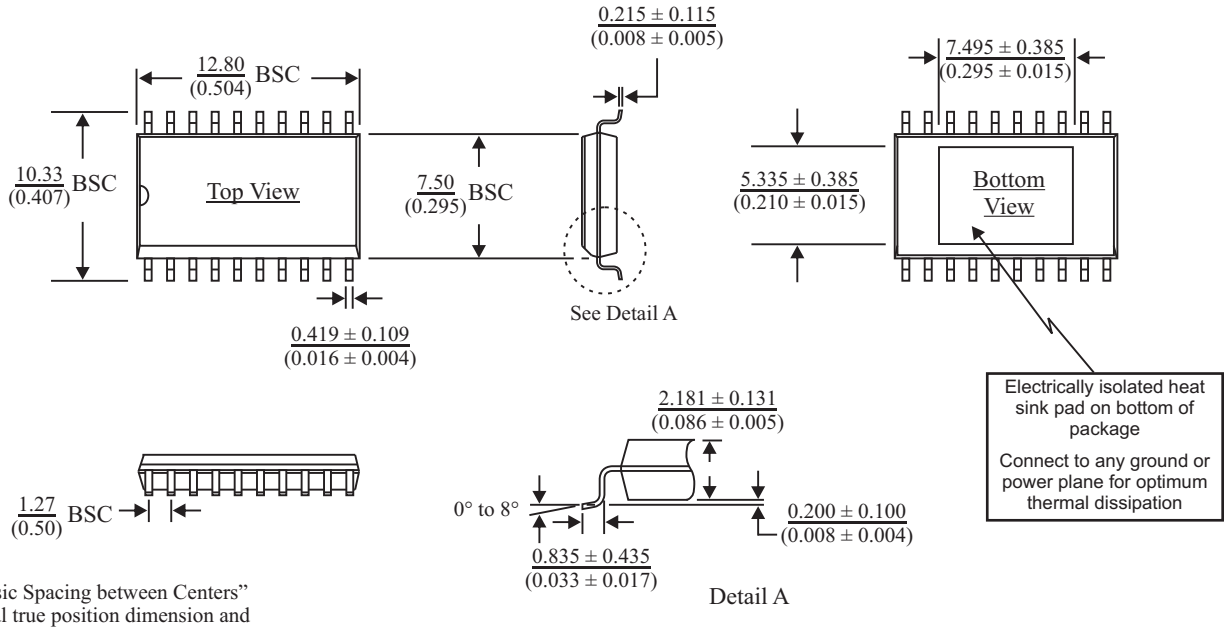

BSC = "Basic Spacing between Centers" is theoretical true position dimension and has no tolerance. (JEDEC Standard 95)

20-PIN CERAMIC SIDE-BRAZED DIP

inches (millimeters)

Package Type: 20C

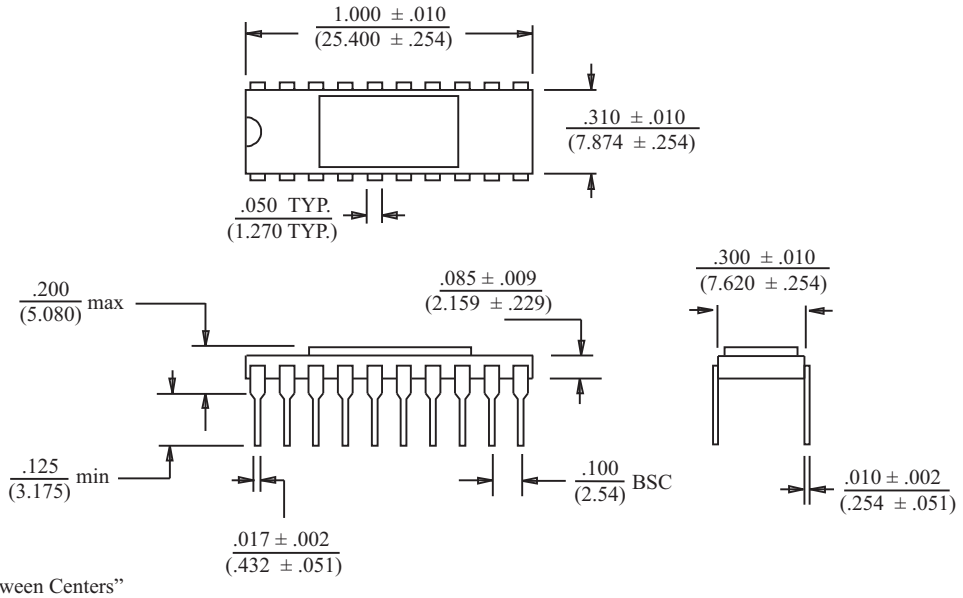

BSC = "Basic Spacing between Centers" is theoretical true position dimension and has no tolerance. (JEDEC Standard 95)

44-PIN PLASTIC CHIP-SCALE PACKAGE (QFN)

millimeters (inches)

Package Type: 44PCS

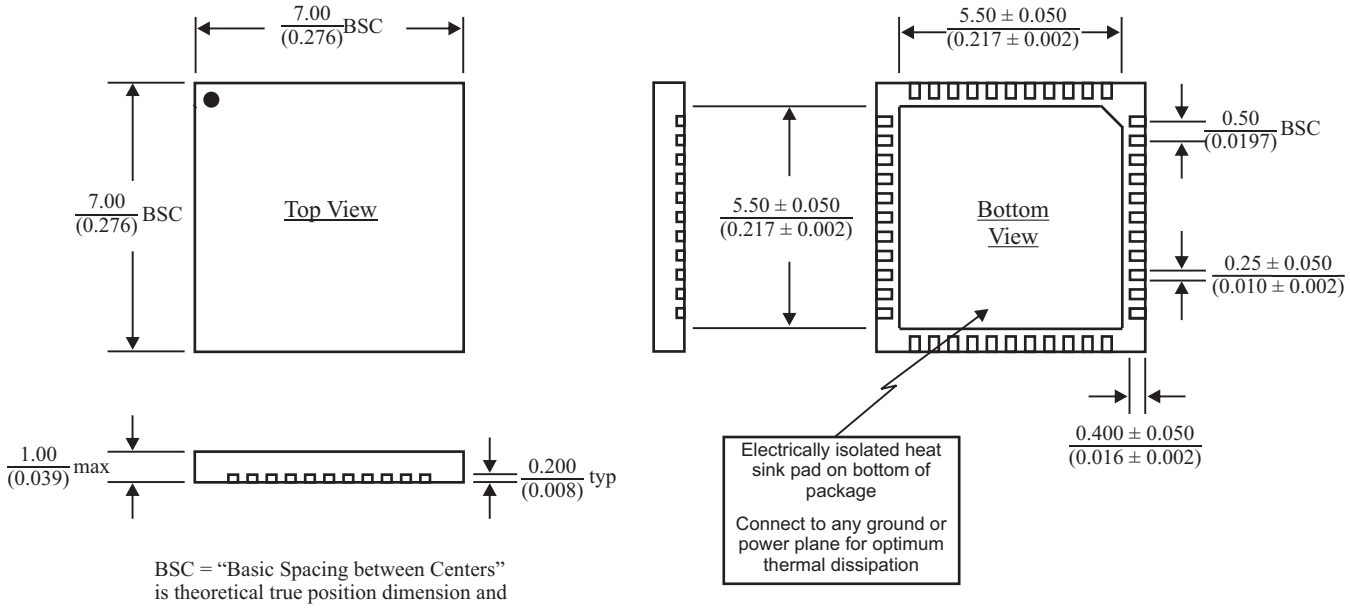

BSC = "Basic Spacing between Centers" is theoretical true position dimension and has no tolerance. (JEDEC Standard 95)